## Construction details

Carcase drilling (all dimensions based on 18 mm carcase thickness)
Drill Pilot holes for wood screws or ø 5 mm holes for Euro screws. Runner positions allow for identical drilling of drawer fronts.

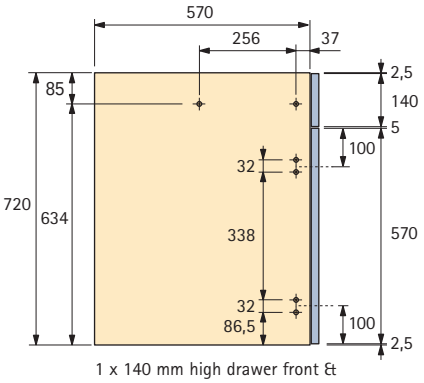

1 x 140 mm high drawer front &
1 x 570 mm high door

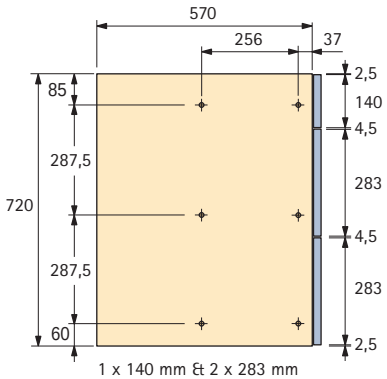

1 x 140 mm & 2 x 283 mm
high drawer fronts

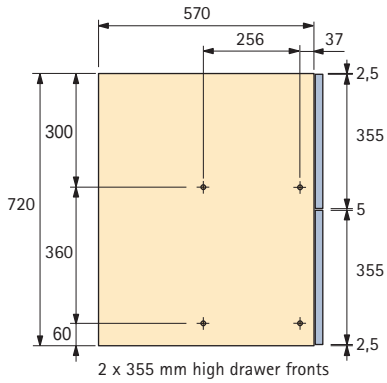

2 x 355 mm high drawer fronts

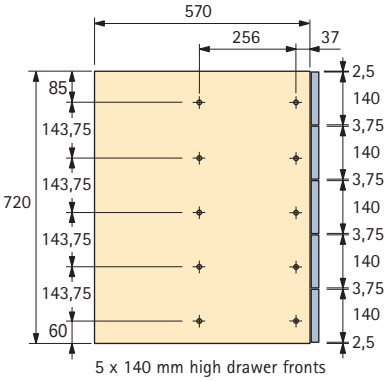

5 x 140 mm high drawer fronts

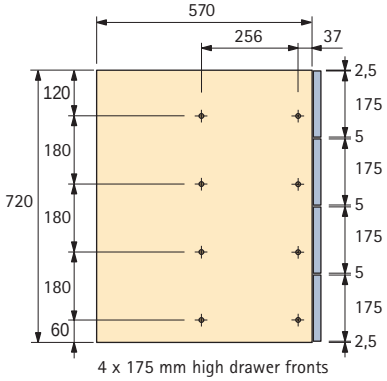

4 x 175 mm high drawer fronts

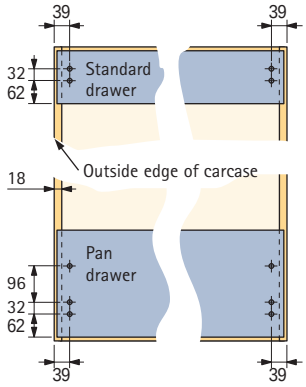

**Drawer front drilling**
(Drill pilot holes for screw-on
front connectors)

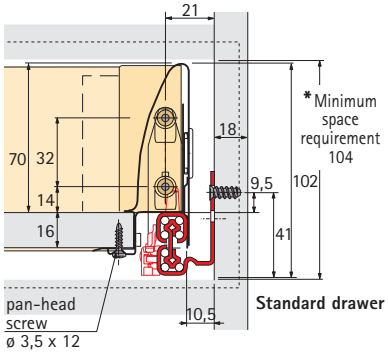


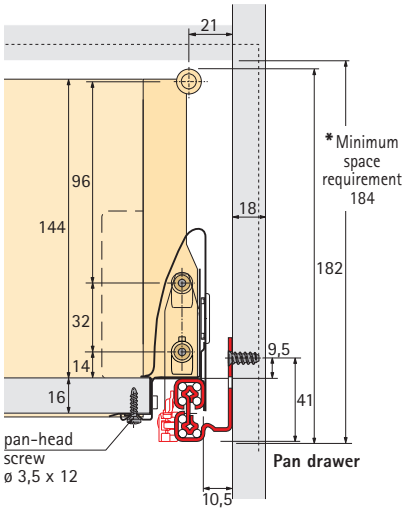


### Cutting List (for drawers)

| Drawer width | Base panel * depth when using steel back | Base panel * depth when using chip/b back | Base panel width * * | Back panel height standard drawer | Back panel height pan drawer | Back panel width * * * |
|---|---|---|---|---|---|---|
| 300 | 467 | 480 | 191,5 | 65,5 | 144 | 180 |
| 400 | 467 | 480 | 291,5 | 65,5 | 144 | 280 |
| 450 | 467 | 480 | 341,5 | 65,5 | 144 | 330 |
| 500 | 467 | 480 | 391,5 | 65,5 | 144 | 380 |
| 600 | 467 | 480 | 491,5 | 65,5 | 144 | 480 |
| 800 | 467 | 480 | 691,5 | 65,5 | 144 | 680 |
| 900 | 467 | 480 | 791,5 | 65,5 | 144 | 780 |
| 1000 | 467 | 480 | 891,5 | 65,5 | 144 | 880 |
| 1200 | 467 | 480 | 1091,5 | 65,5 | 144 | 1080 |

* For 260 drawers = 257 (steel) 270 (chipboard)
** For variable width = inside cabinet width - 72,5
*** For variable width = inside cabinet width - 84